MODEL CMP1000
DUCTWORK CONTROLLER
REFERENCE MANUAL

AMS APPLIED MICROSYSTEMS

© Copyright 1990 Applied Microsystems, Inc. All Rights Reserved

CNP1000 CONTROLLER MANUAL

TABLE OF CONTENTS

INTRODUCTION . . . . . A

SPECIFICATION . . . . . B

FRONT PANEL C

SETUP MODE . . . . . D

BATCH MODE . . . . . E

RUN MODE . . . . . F

COIL MODE . . . . . G

ERROR MESSAGES . . . . . H

INPUT DESCRIPTION I

OUTPUT DESCRIPTION . . . . . J

LENGTH CALIBRATION . . . . . K

DOWN STREAM UNIT CONTROL L

REMOTE DATA LINK . . . . . M

END NOTCH LOCK PATTERNS . . . . . M

SAMPLE SETUP DATA SHEETS

SAMPLE BATCH DATA SHEET

TYPE SPECIFICATION SHEETS

The Model CMP1000 microprocessor controller is a specially designed computer used to control a sheet metal processing machine. The machine converts coils of stock sheet metal material into cut parts which can include vee notch, end notch and a hole punch.

The CMP1000 has been designed to work with a machine that can make a variety of heating, air conditioning, and ventilation (HVAC) ducting parts. The CMP1000 software has been designed to make the programming relatively easy. The operator has only to enter the type of duct construction desired, the finished length and width, and the type of dies to use for the notching patterns. The CMP1000 then calculates the required notch pattern based on the entered information and the parameters entered in the setup mode.

The CMP1000 can be used on a two speed stopping line or a non-stop line. There is the capability of programming 100 different batches or jobs to be run. Also, a coil number can be assigned to each batch and the CMP1000 will automatically tabulate the total footage run, made, and scrapped for that particular coil. Up to 15 different coils can be retained at one time.

The operation of the CMP1000 itself is straightforward. The CMP1000 uses an incremental shaft angle transducer to sense material movement. The transducer generates an exact number of pulses to the CMP1000 which is equal to an exact amount of material movement. The CMP1000 then counts the pulses and activates the appropriate outputs when the programmed movement has occurred. In a two speed line, the computer switches from fast speed to slow speed at a programmed distance from the point of operation so that a more accurate cut can take place. In a non-stop line the CMP1000 does not slow down and the line will continue to run in fast.

The CMP1000 is programmed using a CRT display and a keyboard located on the front panel. The CRT display allows the user to view an entire page of setup, batch, coil, or status information at one time. Data can be entered or changed by using the specified keys on the front panel.

The following is a general specification for the CMP1000. It includes the general features of the system including dimensional size and weight.

Resolution	.012 in with a 12 inch wheel
Accuracy	Output turned on within .012 inch of operation excluding errors in machine tolerance
Maximum Machine Speed	200 feet per minute
Maximum Part Length	9999.99 inches
Maximum Batch Quantity	9999
Number of Batches	100
Pattern Types	5 (0 to 4)
Input Power	115 VAC +/- 10%, 50-60 Hz @ 1 Amp 5 to 24 VDC @ 1 Amp
Outputs	Foward Slow Reverse Shear End Notch Vee Notch Die Select Hole Punch
Inputs	Jog Forward Jog Reverse Sheet Detect Shear Complete End Notch Complete Vee Notch Complete Hole Punch Complete Manual Hole Punch
RS-232 serial ports	Remote Computer Link Down-stream computer link
Coil Storage Capacity	15 different coils
Physical Size	14 in x 17.25 x 7.25 with a 1 in flange on the front panel
Weight	30 pounds

On the front panel of the CMP1000 are 6 lighted pushbutton switches and 28 keys. Information is passed from the operator to the CMP1000 thru these switches and keys. The functions of the pushbutton switches are as follows:

HALT

The HALT key is used to stop the machine from running material. The red lamp indicates that the controller is in the HALT mode.

RUN

The RUN key is used to initiate an automatic run of the CMP1000. The green lamp indicates that the controller is in the RUN mode.

REMOTE DATA LINK

The REMOTE DATA LINK key is used to turn the remote link on or off. The blue lamp indicates when the remote data link is on. See the section titled 'REMOTE DATA LINK' for more information.

MANUAL SHEAR

The MANUAL SHEAR key is used to manually cycle the shear output when the line is in the HALT mode. The yellow lamp indicates when the shear output is on in either the HALT or RUN mode. The shear also causes a reset condition to occur in the controller. A reset condition means that all of the parts in progress will be terminated and the controller will begin again, from the farthest press, to process the uncompleted parts over again. See the section titled 'RUN MODE' for more information.

MANUAL VEE NOTCH

The MANUAL VEE NOTCH key is used to manually cycle the vee notch output when the line is in the HALT mode. The yellow lamp indicates when the vee notch output is on in either the HALT or RUN mode.

MANUAL END NOTCH

The MANUAL END NOTCH key is used to manually cycle the end notch output when the line is in the HALT mode. The yellow lamp indicates when the end notch output is on in either the HALT or RUN mode.

Information is entered into the CMP1000 using the keypads on the front panel. Data is entered at the point where the cursor resides on the CRT screen. The cursor is a shaded rectangular box which not only shows the operator where the next data item will be entered, but also shows how many digits may be entered for the particular data item. The CMP1000 does this by making the cursor size the same size as the maximum number of characters that can be entered into the particular data space. Also note that for data items that require separators or a decimal point, that the required separator or decimal point will automatically be inserted when the maximum number of digits have been entered on the left side of the separator.

When entering numbers which have fewer digits than the maximum allowed, it is not necessary to enter leading or trailing zeroes. For example, suppose that the slowdown distance is to be programed. The range of values for the slowdown distance is 0 to 999.99 inches. If the slowdown distance to be programed is 5.7 inches, the needed keystrokes would be:

5
.
7
ENT

The CRT now shows 5.70 inches and the cursor has advanced to the next data item. Also, if only 5 inches were to be programed, no decimal point is needed to indicate fraction separation, so the keystrokes needed to enter just 5 inches would be:

5
ENT

This form of data entry will shorten the keystrokes needed to enter the data required and also provides for a more 'user-friendly' controller. The functions of the 28 keys located on the 2 keypads are as follows:

ADD LINE

The ADD LINE key is used in the batch mode to insert a new line at the current cursor position. For further information on inserting lines, see the section titled 'RUN MODE'.

DEL LINE

The DEL LINE key is used in the batch mode to delete the line that the cursor is currently on. For further information on deleting lines, see the section titled 'RUN MODE'.

NXT LINE

The NXT LINE key is used in the batch mode to advance the cursor to the beginning of the next data line. It is used to terminate data entry of the current line and advance the cursor to the start of the next data line.

ASTERISK

The ASTERISK key is used to view the downstream status page and also allows the operator to clear the computer's memory. By entering the code "1984" and pressing the ENTER key all setup and batch data will be erased, all the data will then have to be re-entered to begin operation. For more information on this display page see the section titled 'DOWN STREAM UNITS'.

UP ARROW

The UP ARROW key is used in all modes of operation to move the cursor up one line. If the cursor is at the top of page 1 of a

sheet of data, pressing the up arrow key will have no effect. Pressing the up arrow key in the batch mode will cause the cursor to assume its present position in the previous data line.

RIGHT ARROW

The RIGHT ARROW key is used in the batch mode to move the cursor right to the next data column. If the cursor is positioned at the end of the current line, pressing the right arrow key will advance the cursor to the start of the next line.

PAGE UP

The PAGE UP key is used in the setup and batch modes to view the previous screen or page of data. In the setup mode, pressing the page up key with the current page being page 1, will show the setup data on page 3. In the batch mode, pressing page up will show the previous page of batch data with the cursor remaining in it's respective place on the screen unless the top page has been reached. When the top page is reached, the cursor will be positioned at the top of page 1 in the job column.

STAT

The STAT key is used to view the status of the jobs currently stored in the CMP1000. Pressing the stat key will enter the job mode with the cursor positioned on the current job being processed.

DOWN ARROW

The DOWN ARROW key is used in all modes of operation to move the cursor down to the next data line. As with the up arrow key, the position of the cursor in respect to the data line is retained.

LEFT ARROW

The LEFT ARROW key is used in the batch mode to move the cursor

to the previous data column. If the cursor is currently at the beginning of a data line, pressing the left arrow key will cause the cursor to be positioned at the end of the previous data line.

PAGE DN

The PAGE DN key is used in the setup and batch modes to view the next screen or page of data. In the setup mode, if the current page is page 3, pressing the page dn key will cause the CMP1000 to display page 1. In the batch mode, pressing page dn will cause the CMP1000 to show the next page of batch data unless the cursor is presently on the last page. If the cursor is presently on the last batch data page, the cursor will be positioned at the bottom of the page in the job column.

COIL

The COIL key is used to view the totals of all the coils presently being kept by the CMP1000. For more information concerning coil storage and tabulation, see the section titled 'COIL MODE'.

SETUP

The SETUP key is used to enter the setup mode. If the security key located on the front panel is not on, data may be reviewed, but may not be changed. Note that the CMP1000 will return to the status mode if no keys are pressed after a reasonable amount of time.

JOB

The JOB key is used to enter the job or batch mode. Pressing the job key will cause the screen to display the current batch data and the cursor will be positioned at the first available job line.

ENT

The ENT key is the data enter key and it is used by the operator to indicate to the computer the end of a data item entry.

CLR

The CLR key is the data clear key and it is used to erase a data entry before the enter key is pressed. For example, suppose upon entering a data value, you press a wrong key. Pressing the CLR key will cause the CMP1000 to display the data items original value before you started to enter the new value. The CLR key is also used to clear a coil in the coil mode. It is also necessary to press the CLR key to clear any error messages from the screen.

NUMERIC ENTRY KEYS

The keys 0 thru 9, the double-zero (00) key, and the decimal point key are used in entering the numeric values required for a specific data item.

The security lock switch located on the CMP1000 front panel is provided to prevent tampering with data values in the setup mode. This feature was provided with the assumption that once the setup data had been entered, there would be no further need to change the data in this mode. With the switch turned off, the setup data may be reviewed, but cannot be changed. If an attempt is made to change this data with the security switch off, an error message will be displayed.

Also located on the CMP1000 front panel is a contrast control which the operator may adjust to suit the work environment in which the CMP1000 is placed.

The batch mode is used to enter information about the parts the operator wants to run. A "batch" is defined as a quantity of a particular part that is to be produced by the machine. With the CMP1000, it is possible to program a maximum of 100 different batches at any one time. Batches may be programmed in either the halt or run modes. This enables the operator to program the first few batches, put the machine in the run mode, and then program the rest of the batches to be run while the CMP1000 is running the first batches entered. Table 2 shows a copy of the CRT screen as it appears in the batch mode so that operators may make up job sheets. The CMP1000 will run the jobs in the order that they appear on the job screen. If it is desired to add a job in the middle of the job list or delete a job entirely, the ADD LINE and DEL LINE keys may be used to accomplish these operations. A job may be run again by just re-entering the quantity, but only when the CMP1000 is in a reset condition. By doing this, jobs that are run often need not be entered repeatedly if the quantity is updated.

The batch or job mode is entered by pressing the JOB key. The CMP1000 will point to the first available job line with the cursor being placed in the job number column. The job number can be any number the operator desires from 0 to 999999. Different jobs may have the same job number though in practice the operator will usually want to assign each individual job to be run a different job number. To the computer, the job number has no meaning. Jobs are run in the order that they appear on the screen and not in numeric job number order, except that jobs whose status is SKP are skipped, and a job with NXT status will be run next. All data is entered on the job line by entering the appropriate numeric data and terminating the data

entry by pressing the ENT key. The cursor will then automatically advance to the next data column.

The next data item is the quantity. The range of values for the quantity is 1 to 9999. A quantity of zero will cause the CMP1000 to ignore the job entirely.

The next data item is the part type. The CMP1000 produces five different duct types ranging from type 0 to type 4. The type mode is toggled from type 0 thru type 4 by pressing any numeric key with the cursor positioned in the type data column. Table 3 shows what the types look like after fabrication. A description of each type and its respective display character are as follows:

TYPE 0

Type 0 is a shear only part which means the parts are simply sheared to the length programmed with no end notch or vee notch operations. The display character for type 0 is a solid box.

TYPE 1

Type 1 is a shear only part with the end notch patterns punched at both ends. This type of part would be used where four pieces are used to make one cross section of duct. The display character for type 1 is a single line.

TYPE 2

Type 2 parts have an end notch pattern and a single vee notch. This part would form an L-shaped section of duct. The display character for type 2 is an L shape.

TYPE 3

Type 3 parts have an end notch pattern and two vee notches. This part would form a U-shaped section of duct. The display character for type 3 is a U shape.

TYPE 4

Type 4 parts have an end notch pattern and three vee notches. This part would form a box-shape when bent. The display character for type 4 is 4 lines forming a semi-box shape.

In types 0 and 1, only a length is required which should be the finished length of the part. In parts 2 thru 4, both a length and width are required and should represent the finished length of the part.

After entering the required length data, the lock type may be selected.

The next data item is the coil material gauge and width. This is entered by entering the material gauge first and then the width. If the gauge is a single digit number, the separator is added by pressing the decimal point else the separator is added automatically after the second digit of the gauge is entered. The coil width is ALWAYS entered in inches regardless if the CMP1000 is in the metric mode or not. Upon entering the gauge and width, the CMP1000 searches its coil data table to see if the coil is already in the table. If it is not found, the CMP1000 will create a place for it at the end of the table and clear all the totals. If the coil is found, no action is taken on the coil table. The CMP1000 can store 15 different coils. If while programming in the batch mode, a 16th coil is specified, the CMP1000 will flash an error message showing that the coil stack is full and will prompt the operator to press the CLR key to clear the error. For more information regarding coil storage and clearing a coil accumulator, see the section titled 'COIL MODE'.

The next data item is the duct velocity specification. This option is for machines with pinspotter controllers used to automatically fasten insulation to ducts with metal pins. Ducts with different velocities require different pin spacing. Using the information specified in the velocity data column, the CMP1000 is capable of passing the required information to the pinspotter about the type of duct being made. The options are:

NO - No insulation used
HI - High velocity duct
LO - Low velocity duct
SP - Special velocity duct

The duct velocity specification is not needed for type 0 shear only parts and therefore will be skipped in the job line.

The next data item is the connector punch type specification. The option types are drive clete, transverse clete, or no punches. The punch type can be selected by pressing any numeric key to toggle the display prompt to DR, TR, or NO while the cursor is positioned on the connector type data column. Depending on the connector type specified by the operator, the CMP1000 will activate the respective dies when doing the punching operations required for the part selected. Also, the CMP1000 will use the information entered in the setup mode for the punch selected in its internal part calculations. For example, if the drive clete punch option is selected, the CMP1000 will use the punch information entered under the drive clete header in the setup mode, and if the transverse punch option is selected, the CMP1000 will use the punch information entered under the transverse clete header in the setup mode. If NO is selected, neither set of presses will operate, but the leading and trailing lock sizes will still be added to the length of the part.

The next operator-entered data item is the hole punch option. The hole punch option is selected by pressing any numeric key and toggling the display prompt from Y to N with the cursor on the hole punch selection column. Setting this prompt to Y causes the hole punch option to be enabled, which means that the CMP1000 will cycle the hole punch die between the leading edge and the first vee notch for parts 2 thru 4 and in the center of the part for parts 0 and 1.

The last item on each job line is the job status. When a job is entered, it is automatically assigned a status of RDY, or ready to run. If the controller is in the Reset state, the operator may alter job status by pressing any numeric key to toggle from RDY to NXT to SKP. A status of NXT indicates that the operator desires that batch to be run next. Only one batch is allowed NXT status at any given time. If a second batch is assigned NXT status, the previous NXT batch is changed to RDY. After the NXT batch is run, execution will continue sequentially down the screen; any RDY batches above will be run only after the controller enters the Reset state. If the operator enters a batch with RDY status and there is not already a NXT batch, the controller will automatically upgrade the status of that batch to NXT. A status of SKP can be selected to cause the controller to skip a batch entirely. Any number of batches can have SKP status, and any or all of them may later be changed to RDY or NXT. Status of WRK (in work) or DNE (done) cannot be changed, and the cursor will skip to the beginning of the next job line.

After the status is selected, the cursor will advance to the next job line. If this line is the next available job line, the CMP1000 will increment the job number automatically and copy the selectable options from the previous line to the current line. This provides for faster

data entry on runs where the same coil, lock, and punches will be used for more than one job.

The minimum amount of data required to fabricate a part includes a job number, quantity, and length. After this data has been entered, the rest of the data items make up the operator selectable options. After the minimum data requirements are entered, the word RDY will appear under the STA column indicating that the job is ready to run. For more information concerning the status prompts, see the section titled 'RUN MODE'.

If the job stack is full, new parts may be entered only after a job has been completed or an existing job deleted. If a job has been completed and the JOB key is pressed, the completed job will be deleted from the top of the job list to make room for the new entry and the cursor will be positioned in the job number data column for entry of a new job.

The run mode is used to actually produce the parts programmed. The mode is entered by pressing the RUN button and is exited when the HALT button is pressed or at the completion of a batch.

There are two conditions in which the run mode can be entered. The first is a reset condition which means that the computer will begin processing the material from the furthest required press and that the material from that point to the shear will be scrapped. When the CMP1000 is in the reset condition, the fourth line of the CRT will display the message, "SYSTEM RESET". The second condition is a non-reset condition in which the computer will pick up from where it last left off and no scrap material will be generated. A reset condition occurs under any of the following conditions:

1. Controller turned on.
2. Manual cycle of any press.
3. All programmed batches have been run.
4. A different coil is encountered than the previous batch coil.
5. The sheet detector switch opens indicating a coil change.
6. Change from type 0 to types 1 thru 4 or vice-versa.
7. Change of connector type.
8. Change of lock type under the independent die mode.

Once set running, batches will be run in the order that they appear in the job list, except as modified by batches with NXT or SKP status. A batch whose status is NXT will be run before any RDY batches; when the NXT batch is completed, execution continues with RDY batches sequentially down the screen; RDY batches above will be run only after the controller enters the Reset condition. Only one batch may have NXT status at any given time. A batch whose status is SKP will be skipped entirely until the operator changes it to RDY or NXT. The job order may also be altered by inserting or deleting batches using the ADD LINE or DEL LINE key respectively. To insert a batch, position the cursor anywhere on the line where you want the line to be inserted and press the ADD LINE key. The CMP1000 will move the data

in the job list down one line starting with the current line until the end of the job list is encountered. If the job stack is full of ready to run batches (indicated by the word RDY in the STA data column), it is not possible to insert a job line and an error message will be displayed. After inserting the new line, the CMP1000 will copy the selectable options from the line immediately above the inserted line and place them in the inserted line. If the line is inserted at the top of the job list then all of the selectable options are set to the system's default values. Note that if the CMP1000 is not in a reset condition, no lines may be added above the current line being processed by the machine. If a job is completed, and the operator wishes to run the same job again, the quantity need only be entered again; this will restore the job to the 'RDY' status. This can only be done when the CMP1000 is in the reset condition.

To delete a job line, place the cursor anywhere on the line to be deleted and press the DEL LINE key. The CMP1000 will delete the line and move the entire job list up on line starting at the current line. If the job to be deleted is currently in work, the job cannot be deleted since it is being processed by the unit. An attempt to delete a job currently in work will result in no action taken on the job list.

When the CMP1000 enters the run mode, it searches the job list looking for a job with a "RDY" status. If a ready job is not found a "NO PROCESSABLE JOBS FOUND" message will displayed indicating to the operator that the job stack is empty or all pre-programmed jobs have been completed. When the CMP1000 finds a job with a "RDY" status, it begins processing that job starting, depending on the factors listed above, in either a reset or non-reset condition. During the

processing of a batch, the status column of the batch will contain the word "WRK", indicating that the batch is currently in work. After a batch is totally completed, the CMP1000 will automatically change the batch status word to "DNE" to indicate that the batch has been completed. If the run mode is exited by pressing the HALT key, the batch status will still be "WRK" unless something is done to cause a reset condition to occur. Therefore, the current batch may not be deleted unless the controller is first reset.

After a batch is completed, the CMP1000 will exit the run mode and enter the halt mode. To run the next batch in the job list, all that is required is to press the RUN button again to enter the unit into the run mode again. If you wish to modify the order in which the batches are to be done, change the status of appropriate batches to SKP, RDY, or NXT. Note that this can be done only when the controller is reset. If needed, the operator can press MANUAL SHEAR to cause a reset, although caution must be used as such action will cause the generation of some scrap material.

The current controller status may be seen anytime in any mode by observing the first three lines of the CRT screen. This information lines contain the following data:

1. Job number being processed
2. Quantity left to be made
3. Current length of part being made
4. Current gauge and coil being used
5. Description and location of next action to occur
6. Current date and time

This section of the CRT screen is automatically updated by the CMP1000 regardless of the mode of operation.

After completion of a batch and entry into another batch, the CMP1000 checks several parameters to see if a reset condition is needed. One of these parameters is the indication of a different coil than the previous batch. Since a different coil indicates that a coil change is necessary, the CMP1000 will assume a reset is required since new material would be required to be feed into the machine. Upon encountering this condition, the unit will prompt the operator to load the new coil so that any further parts fabricated will be tabulated on the new coil indicated. For more information concerning coil tabulations, see the section titled 'COIL MODE'.

The CMP1000 is capable of storing information on 15 different coils of material. This information can be reviewed by the operator by pressing the COIL key. The CRT will display all active coils with the following information:

1. Gauge and width
2. Total length run
3. Total length made into good parts
4. Total length scrapped
5. Square units run
6. Square units made into good parts
7. Square units scrapped.

The lengths will be shown in feet and square feet if the CMP1000 is in the english mode or meters and square meters if in the metric mode. Regardless of the display mode, the width of the coil will always be displayed in inches.

The CMP1000 constantly updates the coil page as long as no keys have been pressed within the last 10 seconds. All parameters of the active coil will be updated every 3 seconds. You will notice that the scrap parameters seem to increment and decrement randomly. This is due to the fact that as the CMP1000 is processing a part, it considers a part to be scrap unitil the part is sheared. After the part is sheared, the part length is added to the total run and total made columns of that coil and subtracted from the scrap total columns.

Coils are created in the coil table through the programing mode. Upon encountering a new coil number, the CMP1000 will create a place for the coil in the next available position in the coil table. If the coil table is full, a "COIL STACK OVERFLOW" message will be displayed and the coil will have to be re-entered.

To clear a coil, position the cursor on the coil line to be cleared and press the CLR key. The CMP1000 will set all of the coil totals to zero and then search the job list to see if the coil is used

in any jobs with a RDY status. If not, then the coil gauge and width are deleted also. If not, only the totals are cleared and the coil gauge and width will remain in the coil table. Also, when the unit halts between batches and there is a transition from a type 0 to a type 1 thru 4 or vice-versa the scrap is not added to the coil table until the start of processing the next batch.

The CMP1000 is capable of detecting certain programing errors and will report these errors by flashing an error message on the fourth line of the CRT screen. These errors must be acknowledged and cleared by pressing the CLR key. A list of possible errors and an explanation of each are as follows:

RANGE 100 TO 1000

This error occurs when an attempt is made to enter an invalid number of CYCLES PER REVOLUTION into the CMP1000. The number must be between 100 and 1000.

RANGE .25 TO 20.0

This error occurs when a number ouside this range is entered into the DISTANCE PER REVOLUTION parameter.

RANGE 0.9 TO 1.1

This error occurs when an attempt is made to program the CORRECTION FACTOR parameter to in excess of the range of 0.9 to 1.1.

ZERO NOT ALLOWED

This error occurs when an attempt is made to program a parameter to zero when zero is not allowed.

ILLEGAL DATE

This error occurs when an attempt is made to program a date which exceeds one of the following limits:

1. Month out of range of 1 to 12
2. Day out of range of 1 to 31 or 31 days programed for month with only 30 days

ILLEGAL TIME

This error occurs when an attempt is made to program a time which exceeds one of the following limits:

1. Hours out of range of 1 to 12
2. Minutes out of range of 0 to 59

RANGE 1 TO 7 ONLY

This error occurs when an attempt is made to program the lock size parameter out of the valid range of 1 to 7.

SECURITY KEY OFF

This error occurs when an attempt is made to change the setup data with the security key in the off position.

COIL STACK OVERFLOW

This error occurs when an attempt is made to enter more than 15 different coils in the job list. For more information on clearing coils and coil tabulation, see the section titled 'COIL MODE'.

ILLEGAL SPACING

This error occurs when an attempt is made to program the minimum spacing parameter to less than 3 inches, or to program one of the velocity specification lengths less than the minimum spacing.

The CMP1000 is equipped with seven input switches. Two of these switches are supplied through use of the standard input switch cable that is provided. Provisions must be made for the wiring of the other optional switches. The standard input switches and their functions are as follows:

JOG FORWARD

The JOG FORWARD switch is used to move the material in the forward direction while the CMP1000 is in the halt mode. The CMP1000 will continue to move the material as long as it senses that the JOG FORWARD switch is closed. Material movement will stop when the switch is opened. This switch is mainly used to feed the stock material into the machine.

JOG REVERSE

The JOG REVERSE switch is used in the same manner as the JOG FORWARD switch expect that it is used to move the material in the reverse direction. This switch would be used to change stock material by backing the material out of the machine.

The other input switches provided are optional and must be prewired in order to function. Their functions are as follows:

SHEAR COMPLETE

The SHEAR COMPLETE switch is used when the shear cycle time in the setup mode is set equal to zero. When this parameter is set equal to zero, the CMP1000 will activate the shear output until it senses that the SHEAR COMPLETE input switch is closed. This provides the user with the ability to insure that the shear die has completed a full down stroke. After sensing the closure of the SHEAR COMPLETE switch, the CMP1000 will turn the shear output off.

END COMPLETE

The END COMPLETE switch is used when the end notch cycle time in the setup mode is set equal to zero. When this parameter is set equal to zero, the CMP1000 will activate the end notch output until it senses that the END COMPLETE input switch is closed. This provides the user with the ability to insure that the end notch die has completed a full down stoke. After sensing the closure of the END COMPLETE switch, the CMP1000 will turn the end notch output off.

VEE COMPLETE

The VEE COMPLETE switch is used when the vee notch cycle time in the setup mode is set equal to zero. When this parameter is set equal to zero, the CMP1000 will activate the vee notch output unitl it senses that the VEE COMPLETE input switch is closed. This provides the user with the ability to insure that the vee notch die has completed a full down stroke. After sensing the closure of the VEE COMPLETE switch, the CMP1000 will turn the vee notch output off.

HOLE COMPLETE

The HOLE COMPLETE switch is used when the hole punch cycle time in the setup mode is set equal to zero. When this parameter is set equal to zero, the CMP1000 will activate the hole punch output until it senses that the HOLE COMPLETE input switch is closed. This provides the user with the ability to insure that the hole punch die has completed a full down stroke. After sensing the closure of the HOLE COMPLETE switch, the CMP1000 will turn the hole punch output off.

MANUAL HOLE

The MANUAL HOLE input switch is used to manual cycle the hole punch output while in the halt mode. The hole punch output will remain on for it's programed cycle time or until the closure of the hole complete switch if the cycle time is set equal to zero.

The CMP1000 is equipped with eight standard outputs. A description of the outputs and their functions are as follows:

FORWARD

The FORWARD output is used to signal the machine to move in the forward direction. It is used in conjunction with the SLOW output to determine forward speed.

SLOW

The SLOW output is used to signal the machine to move at slow speed. It is used with the FORWARD output to move in slow forward.

REVERSE

The REVERSE output is used to signal the machine to move in reverse.

SHEAR

The SHEAR output is used to cycle the shear die.

END NOTCH

The END NOTCH output is used to cycle the end notch die.

VEE NOTCH

The VEE NOTCH output is used to cycle the vee notch die.

DIE SELECT

The DIE SELECT output is used to select the drive clete die or the transverse clete die. When this output is on, the transverse die are selected. Die selection is done in the batch mode. For more information on die selection, see the section titled 'BATCH MODE'.

HOLE PUNCH

The HOLE PUNCH output is used to cycle the hole punch.

The CMP1000 detects the movement of material through the machine by means of an optical shaft encoder which is also called a rotary pulse generator or rotopulser. It is a device that generates electrical pulses as the shaft is rotated. It can also detect the direction of rotation and it generates a precise number of pulses for each revolution of its shaft. The CMP1000 detects these pulses and counts the net number of up and down pulses in order to know the material position.

The computer only knows the angular displacement of the shaft. In order to translate this angular movement into actual material movement, a precision measuring wheel is attached to the shaft of the encoder. The wheel rides on the material and is carefully aligned so that in one revolution of the shaft, an amount of material equal to the circumference of the wheel moves through the machine.

The resolution of the system (smallest measurable increment) is equal to the circumference of the wheel divided by the number of counts generated in one revolution of the encoder shaft. If the circumference of the wheel is 10 inches and there are 1000 pulses per revolution on the encoder, then the resolution would be 10 inches/1000 counts per revolution or .01 inches. If a 12 inch wheel is used then the resolution would be .012 inches.

The CORRECTION FACTOR is used to compensate for errors in the measuring wheel diameter and gear size errors in the machine. The initial value of the correction factor should always be 1.00000 if the correct values are entered for CYCLES PER REVOLUTION and DISTANCE PER REVOLUTION.

Using this intial value of correction factor, the syatem can then be fine tuned in order to give optimum accuracy. Length inaccuracies consist of two distinct elements - the repeatability error and the linearity error. The repeatability error results from variations in the mechanics of the machine from one operation to the next. This variation would be the same for 1 inch long parts or 100 inch parts. The linearity error is due to slight errors in the size of the measuring wheel or drive gears. This error grows as the length of the part growe. It is not noticable on short parts and can be quite significant on long parts. These two error elements must be clearly separated in order to properly calibrate the CMP1000 system.

The repeatability error can be determined by running a large number of short parts and measuring the total variation in length from the shortest part to the longest part. This total variation should be within the machine's specified tolerance. Further tests should not be attempted until this variation tolerance is met. Once the variation is determined, a part as long as possible should be run and its length carefully measured. A new correction factor can be calculated as follows:

NCF = OCF X PL/AL

Where NCF is the new correction factor
OCF is the old correction factor
PL is the programed length
AL is the actual measured length

As an example, with the old correction factor at 1.00000, a 100 inch part was programed with the result being a 100.25 inch part being made. The new correction factor would be:

NCF = 1.00000 X 100/100.25 = .99751

This new value for correction factor should be entered into the computer. If the resultant error was less than the allowable

tolerance, the previous step should not be done.

At this point, the machine should be reasonably well calibrated. However, a portion of the linear error detected could have been due to a repeatability error. Further calibration can be done by running a large sample of long parts and carefully measuring each part and finding the mean value. The previous calculation can be repeated using the mean value as the measured length to further refine the correction factor. If in the previous example, the correction factor of .99751 were entered and a new run of 100 inch parts resulted in a spread of 100.00 to 100.06, the mean value would be 100.03 and the new calculation would be:

NCF = .99751 X 100/100.03 = .99721

This would then yield parts that are within the specified allowable length variation, centered around the length programed. Further adjustments can be made using this same procedure should the wheel begin to wear.

The CMP1000 is equipped to communicate with three other special types of controller units. These units are responsible for the control of an automatic backgauge stop, an automatic pinspotter, and an automatic dual head backgauge. These three additional units allow the CMP1000 to operate with a minimum of operator input. The operator has only to enter the data required by the CMP1000 to process a part and when the run button is pressed, the CMP1000 passes the needed information to each unit. This system also reduces the possiblity of operator input error in that the operator is required to program only one unit instead of four. The status, position, and auxiliary input conditions of each unit can all be observed by pressing the "*" key.

This down stream unit status page is automatically updated as the appropriate units change status. The backgauges status will toggle among IDLE, RUNNING, CALBRATED, or NO SETUP accordingly. The pin spotter status will toggle between IDLE, RUNNING, and NO SETUP depending on its current status, and the position of each unit will automatically be updated as each unit moves. The fault numbers displayed correspond to the auxiliary inputs of each unit, for example, if auxiliary input one of the brake backgauge controller is closed, then FAULT NO. 1 in the brake backgauge column will show ON. The other inputs will all be displayed as OFF.

The RESET CODE parameter displayed in the lower left-hand corner is used to clear the memory of the CMP1000 controller. By entering the code "1984", all batch and setup data will be erased. In normal operation this function would not be often used.

DIRECT COMPUTER LINK SPECIFICATION
REVISION 2.0

(Current for Version 2.07)

SCOPE

The purpose of this document is to define the hardware and software parameters required to communicate between the CMP1000 Controller and another computer.

HARDWARE

Communication is via an RS-232C link at a baud rate of 300. This is a 10 bit format with 1 start bit, 8 data bits, and 1 stop bit. There is no parity bit.

LINE DISCIPLINE

The software line discipline is half-duplex. The remote computer is considered to be the line master. The CMP1000 will not initiate transmission except in response to a message from the remote computer. All messages must begin with an STX (02) and end with an ETX (03). A checksum byte must follow the ETX. The checksum is computed by taking the two's compliment of the sum of all of the characters transmitted, excluding the control characters.

If the checksum byte equals a control character (STX, ETX OR DLE (16)) then that byte is replaced with two bytes. The first byte is the DLE character and the second is the original character plus 16.

A typical exchange between the CMP1000 and the remote computer would be as follows:

The remote computer would initiate a message:

STX
Message
ETX
Checksum

If a complete message has been received, the CMP1000 will reply with:

STX
Message
ETX
Checksum

If the message was received with an error, the CMP1000 will not respond. The remote computer should retransmit the message after a three second timeout.

DIRECT COMPUTER LINK SPECIFICATION
REVISION 2.0

COMPUTER LINK FUNCTIONS

All messages to and from the computer are in ASCII. Data must be right justified in a field with leading zeroes or spaces added. For data with decimal points, the decimal point is included at it's appropriate location in the data field.

The general form of a message to the CMP1000 is a function code followed by a specific number of characters required by that particular function. The 13 functions recognized by the CMP1000 are as follows:

FUNCTION CODE	FUNCTION
0	REQUEST FOR INFORMATION
1	ORDER ENTRY
2	DOWN LOAD CMP1000 SETUP
3	CLEAR ALL BATCH DATA
4	REQUEST COIL STATUS
5	SET TIME AND DATE
6	DELETE ORDER ENTRY
7	DISPLAY MESSAGE
8	REPORT STATUS
9	REQUEST ORDER STATUS
A	DOWN LOAD BRAKE SETUP
B	DOWN LOAD DUAL HEAD SETUP
C	DOWN LOAD PIN SPOTTER SETUP

REQUEST FOR INFORMATION

Important events can occur in the CMP1000 system that should be reported to the remote computer. Since the CMP1000 cannot initiate a message, these messages are stacked in the queue to await a request for information message. The CMP1000 will then transmit the oldest message along with the number of messages remaining in the queue after that transmission. Up to 50 messages can be stored in the queue at one time. If more messages come in then the oldest message will be deleted.

The remote computer messge is:

byte 1 = 0, function code

The CMP1000 will respond with:

byte 1- 2 = messages left in queue
3 = type of message
4-nn = message

The CMP1000 will not advance to the next message unless the remote computer indicates that the last transmission was valid. This prevents any loss of data due to a loss of transmission.

The remote computer message is:

byte 1 = 0, function code
2 = 1, advance queue

The CMP1000 will respond with:

byte 1 = 1, queue advanced

The types of messages are as follows:

0	no messages in queue
1	job termination report
2	remote data link turned off
3	remote data link turned on
4	coil register cleared
5	machine fault encountered
6	machine fault cleared
7	controller turned on
8	controller turned off
9	display message acknowledged
A	loss of controller memory

NO MESSAGES IN QUEUE

This is the response to a request for information when the queue is empty. The message would be 000 for 00 messages in the queue and a type 0 message.

JOB TERMINATION REPORT

The job termination message is used to report that a job has been terminated. This occurs whenever a job is completed or the computer system is reset. The form of the message is:

```
byte  1- 2 = number of messages left in queue
         3 = 1, function code
      4- 9 = job number
     10-13 = quantity remaining to run
     14-21 = date (MM/DD/YY)
     22-26 = time (HH:MM)
     27-31 = square footage used
```

REMOTE DATA LINK TURNED OFF

Whenever the remote data link is turned off a message is generated in the form:

```
byte  1- 2 = number of messages left in queue
         3 = 2, function code
      4-11 = date (MM/DD/YY)
     12-16 = time (HH:MM)
```

REMOTE DATA LINK TURNED ON

Whenever the remote data link is turned on a message is generated in the form:

```
byte  1- 2 = number of messages left in queue
         3 = 3, function code
      4-11 = date (MM/DD/YY)
     12-16 = time (HH:MM)
```

COIL REGISTER CLEARED

When a coil has been totally used up, the operator should clear the coil register for that coil. When this occurs, a message is generated in the form:

```
byte  1- 2 = number of messages left in queue
         3 = 4, function code
      4-11 = date (MM/DD/YY)
     12-16 = time (HH:MM)
     17-21 = gauge-width (GG-WW)
     22-26 = total lineal footage of coil
```

MACHINE FAULT ENCOUNTERED

The CMP1000 is capable of detecting faults that occur either within itself or on the machine. When these faults occur, a message is generated in the form:

```
byte  1- 2 = number of messages left in queue
         3 = 5, function code
      4- 5 = fault number
      6-13 = date (MM/DD/YY)
     14-18 = time (HH:MM)
```

MACHINE FAULT CLEARED

Should a fault be corrected by the CMP1000 or by the operator, a message is generated in the form:

```
byte  1- 2 = number of messages left in queue
         3 = 6, function code
      4- 5 = fault number
      6-13 = date (MM/DD/YY)
     14-18 = time (HH:MM)
```

CONTROLLER TURNED ON

This message is used to indicate that the CMP1000 was turned on at a specific date and time. The message is generated in the form:

```
byte  1- 2 = number of messages left in queue
         3 = 7, function code
      4-11 = date (MM/DD/YY)
     12-16 = time (HH:MM)
```

CONTROLLER TURNED OFF

This message is used to indicate that the CMP1000 was turned off at a specific date and time. The message is generated in the form:

```
byte  1- 2 = number of messages left in queue
         3 = 8, function code
      4-11 = date (MM/DD/YY)
     12-16 = time (HH:MM)
```

DISPLAY MESSAGE ACKNOWLEDGED

When the display message function is used to display a message on the CMP1000 display, the operator should press the CLR key on the front panel to acknowledge the presence of the message. When this happens, a message is generated in the form:

```
byte  1- 2 = number of messages left in queue
         3 = 9, function code
      4-11 = date (MM/DD/YY)
     12-16 = time (HH:MM)
```

LOSS OF MEMORY

In the event that the CMP1000 should lose it's memory, a message would be stored in the queue to prompt the remote computer to down load the setup parameters and a master list of jobs to be completed. The message is generated in the form:

```
byte  1- 2 = number of messages left in queue
         3 = A, function code
```

ORDER ENTRY

Order entries may be entered from the remote computer using function 1. The form of the entry is:

byte	1	= 1, function code	
	2- 7	= job number	
	8- 11	= quantity	
	12	= part type	0 - shear only
			1 - straight
			2 - L shape
			3 - U shape
			4 - wrap around
	13- 18	= length	xxx.xx inches
	19- 24	= width	xxx.xx inches included in all types
	25	= lock type	1 - 7
	26	= connector	0 - drive clete punches
			1 - transverse flange punches
	27- 31	= coil	GG-WW
	32	= liner vel	0 - no liner
			1 - high velocity
			2 - low velocity
			3 - especial velocity
	33	= hole punch	0 - disable hole punch
			1 - enable hole punch

The CMP1000 will respond with:

byte 1 = 1, order entry accepted

or

byte 1 = 0, order entry memory full or, coil stack memory full

DOWN LOAD CMP1000 SETUP

The setup data parameters may be down loaded to the CMP1000 using function 2. The form of the entry is:

byte			
1	=	2, function code	
2- 5	=	cycles per revolution	xxxx
6- 10	=	distance per revolution	xx.xx
11- 17	=	correction factor	x.xxxxx
18	=	direction of travel	0 - right 1 - left
19	=	units	0 - english 1 - metric
20- 25	=	slowdown length	xxx.xx
26- 31	=	minimum movement	xxx.xx
32- 39	=	date	(MM/DD/YY)
40- 44	=	time	(HH:MM)
45- 49	=	shear actuation time in seconds	xx.xx
50- 54	=	drive clete end-notch actuation time	xx.xx
55- 59	=	drive clete vee-notch actuation time	xx.xx
60- 64	=	transverse end-notch actuation time	xx.xx
65- 69	=	transverse end-notch actuation time	xx.xx
70- 74	=	hole punch actuation time	xx.xx
75- 79	=	pause time after shear	xx.xx
80- 85	=	drive clete end-notch to shear length	xxx.xx
86- 91	=	drive clete vee-notch to shear length	xxx.xx
92- 97	=	transverse end-notch to shear length	xxx.xx
98-103	=	transverse end-notch to shear length	xxx.xx
104-109	=	hole punch to shear length	xxx.xx
110-113	=	actual leading edge die size	xxx.xx
114-117	=	actual trailing edge die size	xxx.xx
118-121	=	notch 1 leading edge lock size	xxx.xx
122-125	=	trailing edge lock size	xxx.xx
126-129	=	brake backgauge offset	xxx.xx
130-133	=	notch 2 leading edge lock size	xxx.xx
134-137	=	trailing edge lock size	xxx.xx
138-141	=	brake backgauge offset	xxx.xx
142-145	=	notch 3 leading edge lock size	xxx.xx
146-149	=	trailing edge lock size	xxx.xx
150-153	=	brake backgauge offset	xxx.xx
154-157	=	notch 4 leading edge lock size	xxx.xx
158-161	=	trailing edge lock size	xxx.xx
162-165	=	brake backgauge offset	xxx.xx
166-169	=	notch 5 leading edge lock size	xxx.xx
170-173	=	trailing edge lock size	xxx.xx
174-177	=	brake backgauge offset	xxx.xx
178-181	=	notch 6 leading edge lock size	xxx.xx
182-185	=	trailing edge lock size	xxx.xx
186-189	=	brake backgauge offset	xxx.xx
190-193	=	notch 7 leading edge lock size	xxx.xx
194-197	=	trailing edge lock size	xxx.xx
198-201	=	brake backgauge offset	xxx.xx
202	=	remote metal flow	0 - normal 1 - reverse

The CMP1000 will repsond with:

byte	1 = 1, setup data accepted

CLEAR ALL BATCH DATA

The remote computer can order the CMP1000 to clear out all order entries in the batch file by using function 3. The form of the entry is:

byte	1 = 3, function code

The CMP1000 will respond with:

byte	1 = 1, batch file cleared
or	
byte	1 = 0, system running, cannot clear batch file

REQUEST COIL STATUS

The remote computer can request the status of all coils currently being maintained in the systems coil register memory by using function 4. The form of the entry is:

byte 1 = 4, function code

The CMP1000 will respond with:

byte
- 1- 5 = gauge-width of coil
- 6- 10 = total square footage used
- 11- 15 = square footage into good parts
- 16 = line feed code
- 17 = carriage return code
- 18-nnn = repeat of above for each coil in memory

SET SYSTEM DATE AND TIME

The remote computer can set the systems date and time by using function 5. The form of the entry is:

byte	1 = 5, function code
2-	9 = date (MM/DD/YY)
10-	14 = time (HH:MM)

The CMP1000 will respond with:

byte	1 = 1, date and time set

DELETE ORDER ENTRY

The remote computer can delete a specific order entry in the batch file by using function 6. The form of the entry is:

byte	1	= 6, function code
2-	7	= job number to be deleted

The CMP1000 will respond with:

byte	1	= 1, order entry deleted from batch file
or		
byte	1	= 0, job not found or, job in work

DISPLAY MESSAGE

The remote computer can send a text message to be displayed on the screen of the CMP1000. The operator acknowledges the message by pressing the CLR key. The format of the message is free form with up to 350 characters allowed. The screen area available is 7 lines of 50 characters each. The message should be terminated by adding an EOT (04) character before the ETX code. A carriage return should be sent to begin writing on the next line without completing the current line. The form of the entry is:

byte	1 = 7, function code
	2 = 0 - Do not halt line
	1 - Halt line
3-nnn	= ASCII message
nnn+1	= EOT

The CMP1000 will respond with:

byte	1 = 1, message accepted and displayed
or	
byte	1 = 0, previous message awaiting acknowledgement

REPORT SYSTEM STATUS

The remote computer can request the system status by using function 8. The form of the entry is:

byte 1 = 8, function code

The CMP1000 will respond with:

byte
- 1 = 0 - CMP1000 reset
  - 1 - CMP1000 idle
  - 2 - CMP1000 running
- 2 = 0 - Brake backgauge idle
  - 1 - Brake backgauge running
  - 2 - Brake backgauge lost memory
  - 3 - Brake backgauge not calibrated
  - 4 - Brake backgauge off line
- 3 = 0 - Dual Head backgauge idle
  - 1 - Dual Head backgauge running
  - 2 - Dual Head backgauge lost memory
  - 3 - Dual Head backgauge not calibrated
  - 4 - Dual Head backgauge off line
- 4 = 0 - Pin Spotter idle
  - 1 - Pin Spotter running
  - 2 - Pin Spotter lost memory
  - 3 - Pin Spotter off line

5- 10 = order entry job number

11- 14 = quantity remaining to be run

REQUEST JOB STATUS

The remote computer can request the status of all jobs currently in the batch file by using function 9. The form of the entry is:

byte 1 = 9, function code

The CMP1000 will respond with:

byte	1- 6	= order entry job number	
	7- 10	= quantity	
	11	= part type	0 - shear only
			1 - straight
			2 - L shape
			3 - U shape
			4 - wrap around
	12- 17	= length	xxx.xx
	18- 23	= width	xxx.xx included in all types
	24	= lock type	1 - 7
	25	= connector type	0 - drive clete
			1 - transverse flange
	26- 30	= coil	GG-WW
	31	= liner velocity	0 - no liner
			1 - high velocity
			2 - low velocity
			3 - special velocity
	32	= hole punch	0 - hole disabled
			1 - hole enabled
	33	= status	0 - Ready
			1 - In Work
			2 - Completed
	34- 37	= quantity remaining to be run	
	38	= carriage return	
	39-nnn	= repeat of above for each job	

DOWN LOAD BRAKE SETUP

The remote computer can down load the setup data for the Brake backgauge thru the CMP1000 by using function A. The form of the entry is:

byte	1	= A, function code	
	2- 5	= cycles per revolution	xxxx
	6- 11	= distance per revolution	xx.xxx
	12- 18	= correction factor	x.xxxxx
	19	= direction of travel	0 - right 1 - left
	20- 26	= reference point	xxx.xxx
	27- 33	= slowdown distance	xxx.xxx
	34- 40	= lead distance	xxx.xxx
	41- 47	= inside tolerance	xxx.xxx
	48- 54	= outside tolerance	xxx.xxx

The CMP1000 will respond with:

byte 1 = 1, data stored, accepted by remote unit

or

byte 1 = 0, data stored, remote unit off line

DOWN LOAD DUAL HEAD SETUP

The remote computer can down load the setup for the Dual Head backgauge thru the CMP1000 by using function B. The form of the entry is:

byte	1	= B, function code	
	2- 5	= cycles per revolution	xxxx
	6- 11	= distance per revolution	xx.xxx
	12- 18	= correction factor	x.xxxxx
	19	= direction of travel	0 - right 1 - left
	20- 26	= reference length	xxx.xxx
	27- 33	= slowdown distance	xxx.xxx
	34- 40	= lead distance	xxx.xxx
	41- 47	= inside tolerance	xxx.xxx
	48- 54	= outside tolerance	xxx.xxx

The CMP1000 will respond with:

byte 1 = 1, data stored, accepted by remote unit

or

byte 1 = 0, data stored, remote unit off line

DOWN LOAD PIN SPOTTER SETUP

The remote unit can down load the setup data for the Pin Spotter thru the CMP1000 by using function C. The form of the entry is:

byte	1	= C, function code	
	2- 5	= cycles per revolution	xxxx
	6- 11	= distance per revolution	xx.xxx
	12- 18	= correction factor	x.xxxxx
	19	= direction of travel	0 - right 1 - left
	20- 24	= fire time	xx.xx
	25- 29	= load time	xx.xx
	30- 34	= delay time	xx.xx
	35- 40	= minimum allowable spacing	xxx.xx
	41- 46	= offset length	xxx.xx
	47- 52	= outside high velocity length	xxx.xx
	53- 58	= inside high velocity length	xxx.xx
	59- 64	= outside low velocity length	xxx.xx
	65- 70	= inside low velocity length	xxx.xx
	71- 76	= outside special velocity length	xxx.xx
	77- 82	= inside special velocity length	xxx.xx

The CMP1000 will respond with:

byte 1 = 1, data stored, accepted by remote unit

or

byte 1 = 0, data stored, remote unit off line

The CMP1000 is capable of handling up to seven different notch widths per die configuration. This allows the machine used to be able to make a notch pattern that is up to twice the actual notch die size.

When the leading and trailing edge die size parameters are programed to zero, the CMP1000 assumes that the size of the notch die is the same as the leading plus the trailing edge notch size that is programed and that changes in notch types will also mean a change in dies on the machine.

When the leading and trailing edge die size parameters are programed to the leading and trailing edge of the machine's notch die, the CMP1000 is able to make a varied amount of notch sizes. This is done thru the units ability to make either a double-notch for notch sizes larger than the actual notch die size, or a double-shear for notch sizes smaller than the actual die size.

When the CMP1000 encounters a part with a notch pattern, it compares the machines programed die size to the part's programed notch size. If the notch size is greater than the actual die size, the CMP1000 will double notch the material in order to produce a notch pattern that is equal to the programed notch size.

If the notch size is smaller than the actual die size, the CMP1000 will notch the material once but, when the part reaches the cutoff press, the CMP1000 will double shear the part to eliminate the excessive notch pattern. This means that the CMP1000 will shear once for the trailing edge of one part and once for the leading edge of the next part.

		RANGE
CYCLES PER REVOLUTION	___	100 - 1000
DISTANCE PER REVOLUTION	__.__	.25 - 20.00
CORRECTION FACTOR	_._____	.90 - 1.1
DIRECTION OF TRAVEL	_____	RIGHT - LEFT
UNIT OF LENGTH	_____	ENGLISH - METRIC
POWER LINE FREQUENCY	__	50 - 60 HZ
DATE MONTH / DAY /YEAR	__/__/__	
TIME	__:__	AM - PM
SLOWDOWN DISTANCE	___.__	0 - 999.99 INCHES
MINIMUM MOVEMENT	___.__	.01 - 999.99 INCHES
SHEAR ACTUATION TIME	___.__	0 - 999.99 SECONDS
PAUSE TIME AFTER SHEAR	___.__	0 - 999.99 SECONDS
HALT BETWEEN SHEAR-ONLY BATCHES?	____	YES - NO
REMOTE METAL FLOW	_____	NORMAL - REVERSE

DRIVE CLETE PUNCHES

END-NOTCH TO SHEAR DISTANCE	____"	0 - 999.99 INCHES
VEE-NOTCH TO SHEAR DISTANCE	____"	0 - 999.99 INCHES
END-NOTCH ACTUATION TIME	____"	0 - 99.99 SECONDS
VEE-NOTCH ACTUATION TIME	____"	0 - 99.99 SECONDS

TRANSVERSE CLETE PUNCHES

END-NOTCH TO SHEAR DISTANCE	____"	0 - 999.99 INCHES
VEE-NOTCH TO SHEAR DISTANCE	____"	0 - 999.99 INCHES
END-NOTCH ACTUATION TIME	____"	0 - 99.99 SECONDS
VEE-NOTCH ACTUATION TIME	____"	0 - 99.99 SECONDS

HOLE PUNCH

HOLE PUNCH TO SHEAR DISTANCE	____"	0 - 999.99 INCHES
HOLE PUNCH ACTUATION TIME	____"	0 - 99.99 SECONDS

SETUP DATA PAGE 3 OF 7 RANGE

LEADING EDGE DIE SIZE		____._____	0 - 999.99 INCHES
TRAILING EDGE DIE SIZE		____._____	0 - 999.99 INCHES
NOTCH 1	LEADING EDGE LOCK SIZE	____._____	0 - 999.99 INCHES
	TRAILING EDGE LOCK SIZE	____._____	0 - 999.99 INCHES
	BACKGAUGE BRAKE OFFSET	____._____	0 - 999.99 INCHES
NOTCH 2	LEADING EDGE LOCK SIZE	____._____	0 - 999.99 INCHES
	TRAILING EDGE LOCK SIZE	____._____	0 - 999.99 INCHES
	BACKGAUGE BRAKE OFFSET	____._____	0 - 999.99 INCHES
NOTCH 3	LEADING EDGE LOCK SIZE	____._____	0 - 999.99 INCHES
	TRAILING EDGE LOCK SIZE	____._____	0 - 999.99 INCHES
	BACKGAUGE BRAKE OFFSET	____._____	0 - 999.99 INCHES

SETUP DATA PAGE 4 OF 7 RANGE

NOTCH 4	LEADING EDGE LOCK SIZE	____.__	0 - 999.99 INCHES
	TRAILING EDGE LOCK SIZE	____.__	0 - 999.99 INCHES
	BACKGAUGE BRAKE OFFSET	____.__	0 - 999.99 INCHES
NOTCH 5	LEADING EDGE LOCK SIZE	____.__	0 - 999.99 INCHES
	TRAILING EDGE LOCK SIZE	____.__	0 - 999.99 INCHES
	BACKGAUGE BRAKE OFFSET	____.__	0 - 999.99 INCHES
NOTCH 6	LEADING EDGE LOCK SIZE	____.__	0 - 999.99 INCHES
	TRAILING EDGE LOCK SIZE	____.__	0 - 999.99 INCHES
	BACKGAUGE BRAKE OFFSET	____.__	0 - 999.99 INCHES
NOTCH 7	LEADING EDGE LOCK SIZE	____.__	0 - 999.99 INCHES
	TRAILING EDGE LOCK SIZE	____.__	0 - 999.99 INCHES
	BACKGAUGE BRAKE OFFSET	____.__	0 - 999.99 INCHES

BRAKE BACKGAUGE

CYCLES PER REVOLUTION	____	100 - 1000	
DISTANCE PER REVOLUTION	__.___	.1 - 20.0	INCHES
CORRECTION FACTOR	_._____	.9 - 1.1	
DIRECTION OF TRAVEL	_____	RIGHT - LEFT	
REFERENCE POINT	___.___	0 - 999.999	INCHES
SLOWDOWN DISTANCE	___.___	0 - 999.999	INCHES
LEAD DISTACNE	___.___	0 - 999.999	INCHES
INSIDE TOLERANCE	___.___	0 - 999.999	INCHES
OUTSIDE TOLERANCE	___.___	0 - 999.999	INCHES

DUAL HEAD BACKGAUGE

CYCLES PER REVOLUTION	____	100 - 1000
DISTANCE PER REVOLUTION	__.___	.1 - 20.0 INCHES
CORRECTION FACTOR	_._____	.9 - 1.1
DIRECTION OF TRAVEL	_____	RIGHT - LEFT
REFERENCE POINT	___.___	0 - 999.999 INCHES
SLOWDOWN DISTANCE	___.___	0 - 999.999 INCHES
LEAD DISTANCE	___.___	0 - 999.999 INCHES
INSIDE TOLERANCE	___.___	0 - 999.999 INCHES
OUTSIDE TOLERANCE	___.___	0 - 999.999 INCHES

SETUP DATA PAGE 7 OF 7

PIN SPOTTER

		RANGE	
CYCLES PER REVOLUTION	____	100 - 1000	
DISTANCE PER REVOLUTION	__.__	2.5 - 20.0	INCHES
CORRECTION FACTOR	_.____	.9 - 1.1	
DIRECTION OF TRAVEL	_____	RIGHT - LEFT	
FIRE TIME	__.__	.01 - 99.99	SECONDS
DELAY TIME	__.__	.01 - 99.99	SECONDS
LOAD TIME	__.__	.01 - 99.99	SECONDS
MINIMUM ALLOWABLE SPACING	___.__	.00 - 999.99	INCHES
OUTSIDE HIGH VELOCITY	___.__	3.00 - 999.99	INCHES
INSIDE HIGH VELOCITY	___.__	3.00 - 999.99	INCHES
OUTSIDE LOW VELOCITY	___.__	3.00 - 999.99	INCHES
INSIDE LOW VELOCITY	___.__	3.00 - 999.99	INCHES
OUTSIDE SPECIAL VELOCITY	___.__	3.00 - 999.99	INCHES
INSIDE SPECIAL VELOCITY	___.__	3.00 - 999.99	INCHES

JOB SHEET

DATE __ / __ / __

JOB	QTY	TY	LENGTH	WIDTH	LOCK	GA-WD	VE	CO	P	STA

The setup mode is used to enter the machine parameters and other seldom changed parameters. This data may vary from machine to machine and therefore cannot be permanently set into the CMP1000. However, the computer has a rechargeable ni-cad battery that maintains power to the internal memory circuits so that this data can be retained when the power is off. The battery is automatically charged whenever the unit is on. If the battery should ever discharge, the CMP1000 will automatically enter the setup mode when turned on to force the operator to re-enter the setup data. The setup mode is entered by pressing the SETUP key.

The setup data consists of seven pages. The first page contains general data that the CMP1000 needs to know about the machine. The second page contains information about the different punch dies that the CMP1000 will use. The third and fourth pages contain information about the different lock types that are used. Table 1 shows these parameters as they appear on the CRT screen with the range of allowable values and a place to write in the proper values for your machine. The fifth, sixth, and seventh pages contain the setup data for the downstream units. Refer to the proper operators manual for information concerning these units. The setup parameters for the CMP1000 and their associated functions are as follows:

CYCLES PER REVOLUTION

The CMP1000 uses an optical transducer which produces pulses that are counted by the controller. These pulses are then used to calculate the amount of material that has been moved. To do this properly, the exact number of pulses produced in one revolution of the transducer's wheel must be known. That value should be entered as the CYCLES PER REVOLUTION parameter; it defaults to a

value of 256 if no value is entered.

DISTANCE PER REVOLUTION

The DISTANCE PER REVOLUTION parameter is equal to the circumference of the wheel attached to the length transducer. This value allows the operator to account for wear on the wheel with extended use. This wear will cause the wheel to become smaller and cover less distance in one revolution, thus causing miscalculations in distance. This value defaults to 12.00 in. if no other value is entered.

CORRECTION FACTOR

The CORRECTION FACTOR is a constant that is used to compensate for slight gear size errors that may be in the machine and wheel wear. With no correction required, the value would be 1.00000. A larger number would result in larger parts and a smaller number would result in smaller parts. For further information on the correction factor, see the section titled 'LENGTH CALIBRATION'.

DIRECTION OF TRAVEL

The length transducer provides direction of flow information to the CMP1000 but it can be mounted on the machine so that for a forward movement of the material, either a clockwise or counter-clockwise rotation of the transducer shaft will occur. The DIRECTION OF TRAVEL parameter allows the operator to change the counting direction by pressing any numeric key and toggling the travel direction from right to left. If the CMP1000 counts in the negative direction for a forward movement of material, the direction of travel parameter should be changed.

UNIT OF LENGTH

The UNIT OF LENGTH parameter allows the CMP1000 to accept and

display all of its various lengths and other parameters in the english system or the metric system. This parameter can be toggled back and forth by pressing any numeric key. Remember, if the unit of length parameter is set to metric, you must enter all lengths in metric also.

POWER LINE FREQUENCY

The POWER LINE FREQUENCY parameter may be toggled between 60 and 50 Hz by pressing any numeric key, and should match that of the local power line to minimize screen flicker.

DATE

The DATE parameter is the current date and should be entered as:

month / day / year

The separators will be entered automatically if the month and/or day is a two digit number or can be manually inserted by using the decimal point key. For example, to enter the date of October 23, 1983 the necessary keystrokes are:

1 0 2 3 8 3 ENT

To enter the date of June 6, 1984 the necessary keystrokes are:

6 . 6 . 8 4 ENT

Once the date is set, it is automatically updated by the CMP1000 and will not have to be changed unless a loss of memory condition occurs.

TIME

The TIME parameter is the current time and should be entered as:

hours / minutes / am or pm

As with the date, the separator is automatically inserted when entering a two digit hours or can be manually inserted if entering a single digit hour by pressing the decimal point key.

After the hours and minutes have been entered, the am or pm selection can be made by pressing any numeric key to toggle the display tag from am to pm. As with the date, once the time is set, the CMP1000 will automatically keep the time by means of on-board clock circuits.

SLOWDOWN DISTANCE

The SLOWDOWN DISTANCE is the length required for the machine to dependably shift from fast speed to slow speed so that the material is moving at a slow speed when a press operation occurs. If the slowdown distance is greater than the distance between the present operation and the next operation, the machine will continuously run in slow speed. For example, if the slowdown distance was set to 10 inches and the CMP1000 were programed to run 8 inch shear only parts, the machine would run the parts in slow speed since the distance to the next point of action is always less than 10 inches. If the slowdown distance is set to zero, the CMP1000 will continuously run in the fast speed and will not slow down or stop for any press operations.

MINIMUM MOVEMENT

The MINIMUM MOVEMENT parameter sets the minimum distance that the CMP1000 must move between operations when the line is started. If the distance to the next operation is shorter than the MINIMUM MOVEMENT parameter, the CMP1000 will back the metal out until the distance to the next operation is longer than the MINIMUM MOVEMENT.

SHEAR ACTUATION TIME

The SHEAR ACTUATION TIME is the time required for the shear output to be on to completely shear. If the shear actuation time is set equal to zero then the CMP1000 assumes that the optional shear complete switch is in use. The shear complete switch is an optional input switch which signals the computer that the shear die has completed a full cycle. The CMP1000 will turn the shear output on until this switch is sensed then the output will be turned off.

PAUSE TIME AFTER SHEAR

The PAUSE TIME AFTER SHEAR parameter is the time delay after a shear that the line will be stopped. The purpose of this would be to allow some distance between parts or to allow the shear die time to retract from the material before the line starts in forward again. If the shear actuation time is set to zero, this parameter is ignored.

HALT BETWEEN SHEAR-ONLY BATCHES?

Normally the CMP1000 stops the line at the completion of each batch. However, if a NO response is given to this YES/NO selection, there will be no halt between batches of shear-only parts (TYPE 0) provided there is not a coil changed required. The line will still halt after making other types of parts, or before starting to make another type.

REMOTE METAL FLOW

The REMOTE METAL FLOW parameter is used for 'two-part' machines which reverse the part end for end before completion. On certain parts, this would cause the length and the width to be reversed. In order for the CMP1000 to relay the correct information to it's downstream units, this parameter must be set to REVERSE for 'two-part' lines or NORMAL for 'straight' lines.

END NOTCH TO SHEAR DISTANCE

The END NOTCH TO SHEAR DISTANCE is the distance from the center of the end notch die to the center of the shear die. This measurement is best determined by loading the machine up with material and manually cycling the shear and end notch presses without moving the material. The strip of material can then be run out of the machine and the distance from the leading edge of the strip of material to the center of the end notch pattern is the end notch to shear distance. If the shear removes a slug of material, then half of this slug width must be added to the measurement since the distance specified is from die center to die center.

VEE NOTCH TO SHEAR DISTANCE

The VEE NOTCH TO SHEAR DISTANCE is the distance from the center of the vee notch die to the center of the shear die. This distance can be determined in the same manner as for the end notch die.

END NOTCH ACTUATION TIME

The END NOTCH ACTUATION TIME is the time required for the end notch output to be on to complete an end notch operation. If the end notch actuation time is set equal to zero, then the CMP1000 assumes the optional end notch complete switch is in use. This switch operates exactly as the shear complete switch. See SHEAR ACTUATION TIME for more information.

VEE NOTCH ACTUATION TIME

The VEE NOTCH ACTUATION TIME is the time required for the vee notch output to be on to complete a vee notch operation. If the vee notch actuation time is set to zero, the CMP1000 assumes the optional vee notch complete switch is in use. This switch operates exactly as the shear complete switch. See SHEAR ACTUATION TIME for more information.

HOLE PUNCH TO SHEAR DISTANCE

The HOLE PUNCH TO SHEAR DISTANCE is the distance from the center of the hole punch die to the center of the shear die. This distance can be determined in the same manner as for the end notch die.

HOLE PUNCH ACTUATION TIME

The HOLE PUNCH ACTUATION TIME is the time required for the hole punch output to be on to complete a hole punch operation. If the hole punch actuation time is set to zero, the CMP1000 assumes that the optional hole punch complete switch is in use. This switch operates exactly as the shear complete switch. See SHEAR ACTUATION TIME for more information.

LEADING EDGE DIE SIZE

The LEADING EDGE DIE SIZE is the distance from the trailing edge of the notch die to the center of the notch die. This parameter is used to calculate the LEADING EDGE LOCK SIZE of the part.

TRAILING EDGE DIE SIZE

The TRAILING EDGE DIE SIZE is the distance from the leading edge of the notch die to the center of the notch die. This parameter is used to calculate the TRAILING EDGE LOCK SIZE of the part.

NOTCH x LEADING EDGE LOCK SIZE

The LEADING EDGE LOCK SIZE is the distance from the trailing edge of the notch pattern to the center of the notch pattern and makes the leading edge notch of the part. This parameter is used by the CMP1000 when a batch is programed that includes a notch x pattern. The CMP1000 uses this parameter in conjunction with the LEADING EDGE DIE SIZE to determine whether the particular notch pattern requires the use of a 'double notch' or 'double shear' for fabrication. The parameter x ranges from 1 to 7.

NOTCH x TRAILING EDGE LOCK SIZE

The TRAILING EDGE LOCK SIZE is the distance from the leading edge of the notch pattern to the center of the notch pattern and makes the trailing edge notch of the part. This parameter is used by the CMP1000 when a batch is programed that includes a notch x pattern. The CMP1000 uses this parameter in conjunction with the TRAILING EDGE DIE SIZE to determine whether the particular notch pattern requires the use of a 'double notch' or 'double shear' for fabrication. The parameter x ranges from 1 to 7.

BACKGAUGE BRAKE OFFSET

The BACKGAUGE BRAKE OFFSET parameter is used to position the brake backgauge guides wider than the programmed width or length. This parameter is added to the programmed position and is transmitted to the brake when a job is run.

The CMP1000 is designed to work with a machine which can use various types of dies. On page two of the setup data are parameters for a set of transverse flange punches which, when selected through batch programing, replace the regular drive clete punches. If your machine utilizes these particular dies, the setup parameters for them must also be entered.

The CMP1000 also offers the option of lock type selectability. On page 3 of the setup data are parameters for seven different locks. If your machine utilizes these lock types, their setup parameters must be entered also.

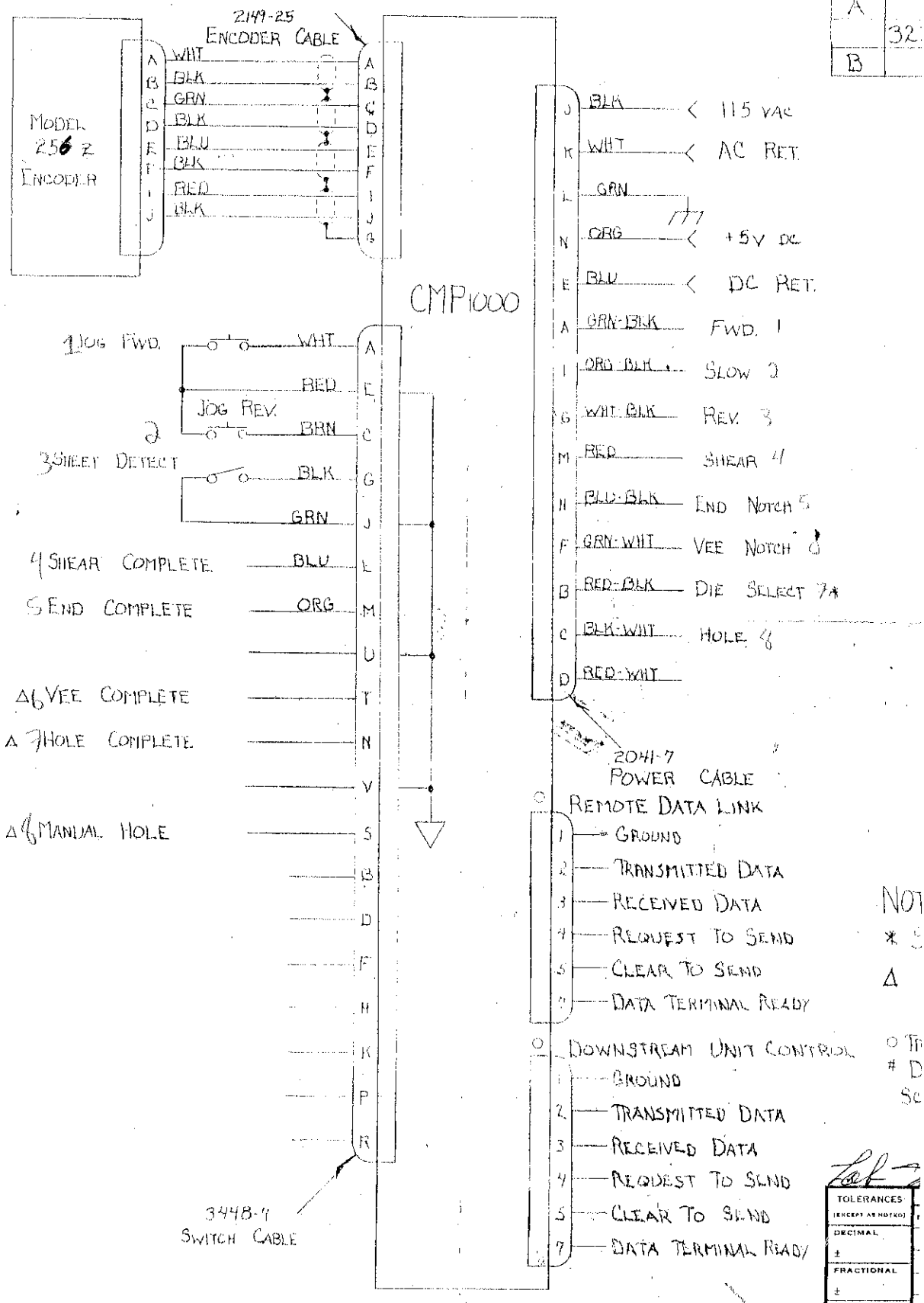

REV.	ECF
	92
	28
A	
	32
B	

NOT
* S
Δ
○ Tr
D
Sc

TOLERANCES (EXCEPT AS NOTED)
DECIMAL ±
FRACTIONAL ±
ANGULAR ±

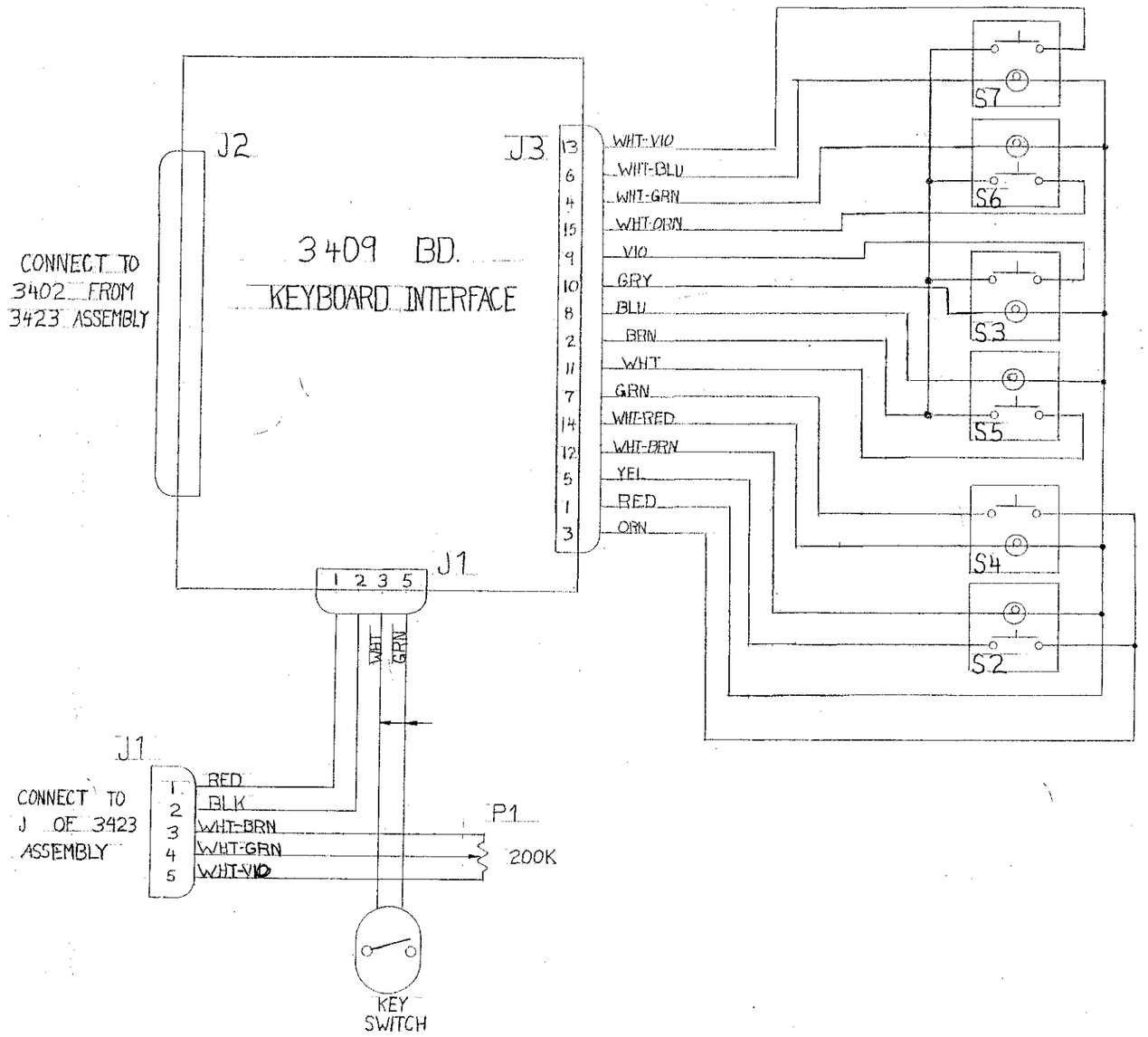

TOLERANCES (EXCEPT AS NOTED)	REVISIONS NO.	DATE	BY	APPLIED MICROSYSTEMS
DECIMAL ±	1			WIRING DIAGRAM, FRONT PANAL CMP1000
FRACTIONAL ±	2			
ANGULAR ±	3			DRAWN BY A. Wilson / SCALE / MATERIAL
	4			CHK'D / DATE 12-9-83 / DRAWING NO. 3421
	5			TRACED / APP'D

REV.	ECF #
	92
	280
A	
	323
B	

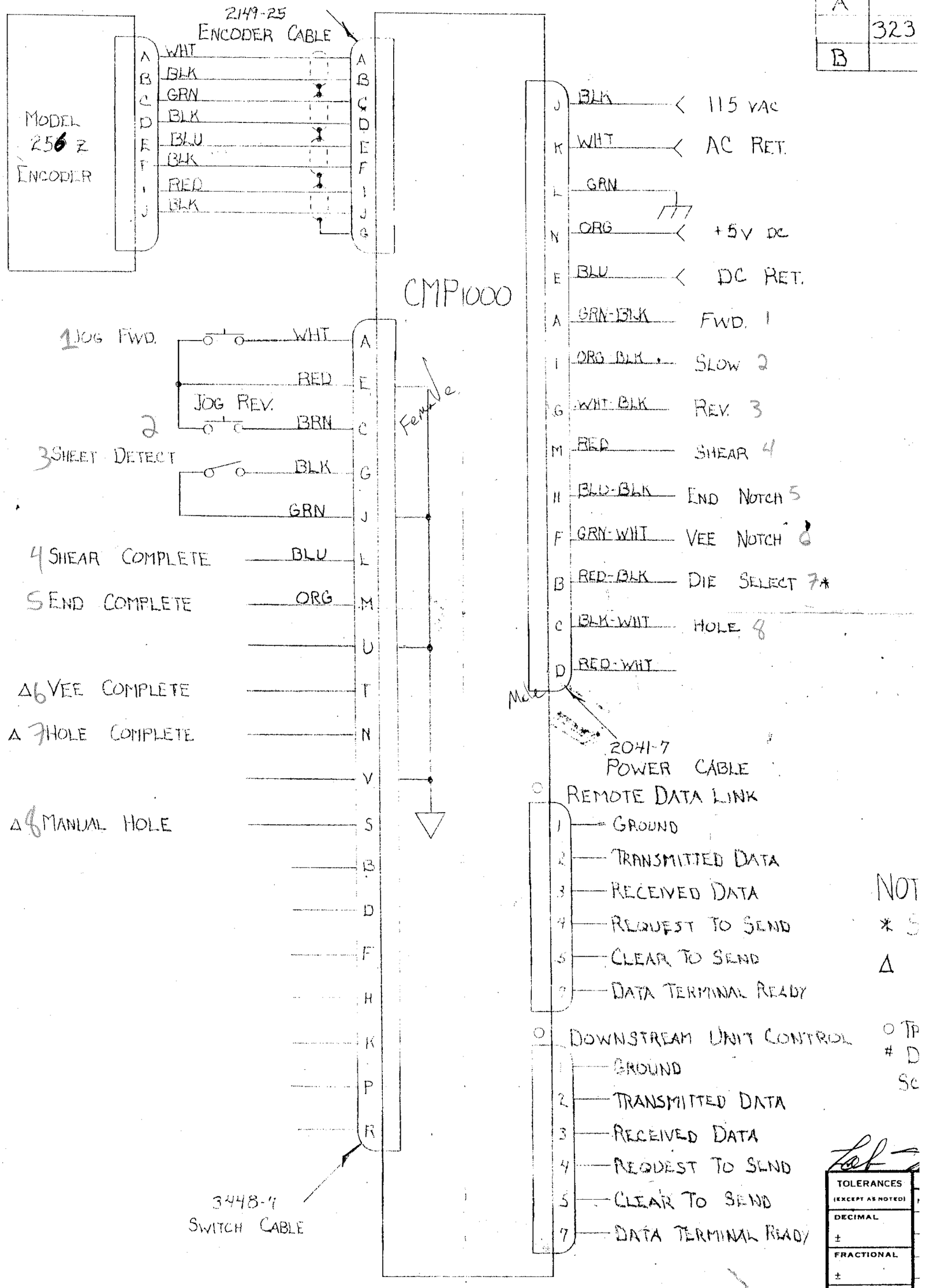

NOT
* S
Δ
○ TP
D
Sc

TOLERANCES (EXCEPT AS NOTED)
DECIMAL ±
FRACTIONAL ±
ANGULAR ±